Pellet boilers

P4 Pellet

DER BLAUE ENGEL
weil emissionsarm und energieeffizient
schützt das KLIMA

Awarded
the Ecolabel!

Heating with pellets

Froling has concentrated on the efficient use of wood as an energy source for nearly 50 years. Today the Froling name stands for modern biomass heating technology from Austria. Our firewood, waste wood and pellet boilers are used successfully around the world. All products are produced at our own factories in Austria and Germany. The state of the art machinery guarantees quality down to the smallest detail. Froling's comprehensive service network ensures customers' needs are handled quickly and reliably.

Make savings with pellets without compromising on comfort

In the last few years the price development of the individual energy sources has shown the advantages of wood pellets: this ecological clean way to heat is also economical. The energy source wood is renewable and as a result CO2 neutral. Pellets are made from natural wood. The untreated shavings, which are produced in large quantities as a byproduct in the wood processing industry, are compacted and made into pellets without being treated. Pellets have a high energy density and are easy to deliver and store. These are just some of the advantages that make pellets the perfect fuel for fully automatic heating systems. Pellet are delivered by tanker, which unloads the pellets directly into your wood store.

P4 Pellet

The next generation of pellet boilers

Froling has set new international standards for technology and design with the new P4 Pellet. With its ingenious fully automatic operation, this new product from Froling is amazingly easy to use.

Multiple award-winning

BLUE ANGEL & AUSTRIAN ECOLABEL - Awards for quality and safety

The Froling P4 Pellet boiler has also won many international quality awards in Europe and the USA. Some of the key awards are the Blue Angel and the Austrian Ecolabel. The Blue Angel describes itself as the first environmental award in the world for products and services and it enjoys the full confidence of consumers. As you know, products awarded the Blue Angel are very high quality.

THE BLUE ANGEL
Germany

Wood pellet boilers with the Blue Angel are noted for their:

- High energy efficiency
- Pollution levels well below the applicable DIN standards
- Economical use of renewable raw materials
- Fully automatic operation exclusively with wood pellets

ECOLABEL
Austria

VESTA Award
USA

Innovation Award at the "Bois Energie" trade fair, 2008
France

New Product of the Show Award
Ireland

Modern biomass boilers are future-oriented and economical. This is also guaranteed by numerous international requirements for emissions and efficiency levels. In Austria the limit values are set by Art. 15a B-VG and in Germany they are set by the federal Emissions Prevention Act passed at the start of 2010 (implemented in the BImSchV).

From energy-saving houses to blocks of flats

When determining the heating requirements, the heated living area and the construction above all play an important role. The P4 is available in 8 different sizes and with its wide output range it can be used in both energy-saving houses and in buildings with greater heating requirements. It can also be connected to an existing heating system. The intelligent control management of the Froling Lambdatronic P 3200 takes over all control functions including remote monitoring using a PC or mobile phone.

P4 Pellet 8/15/20/25	P4 Pellet 32/38	P4 Pellet 48/60
User-friendly ash drawer	Automatic ash removal	Automatic ash removal

User-Friendly Ash Drawer (P4 8-25)

With user-friendly ash removal the ash is automatically fed into two ash drawers. A lid is also available for dust-free and easy transportation.

Automatic Ash Removal (from P4 32)

With automatic ash removal the ash is fed into two external ash boxes. The smart locking mechanism is used for quick and easy removal of the ash box.

The latest technology

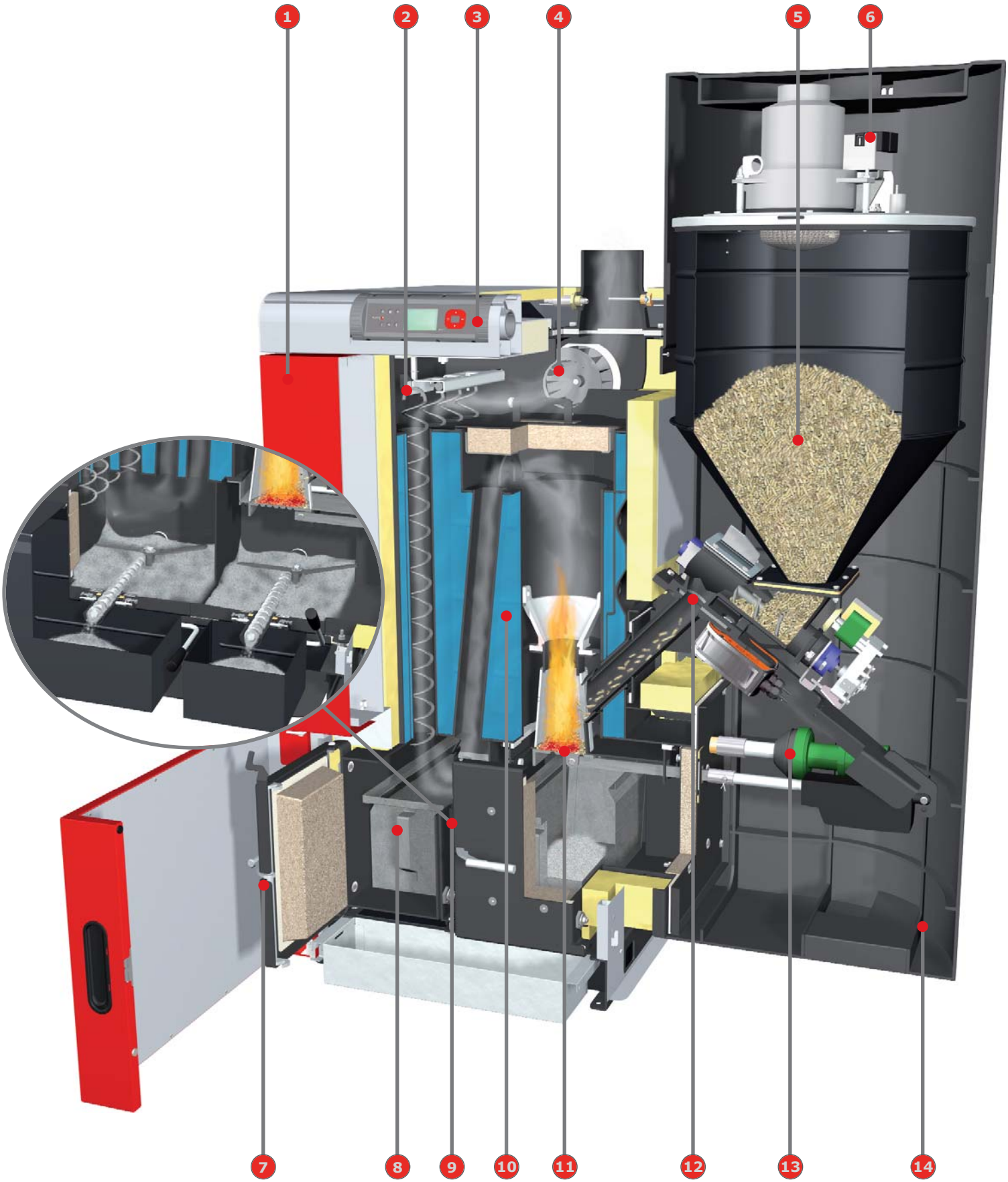

P4 Pellet

The new pellet boiler with special benefits:

1. Multi-layer insulation for the highest level of thermal insulation.
2. WOS technology (heat exchanger) for maximum efficiency with a drive for automatic cleaning.
3. Lambdatronic P 3200 control with innovative bus technology.
4. Induced draught fan with regulated speed and function monitoring for highest operating safety.
5. Spacious store container with automatic pellet feed.
6. Store gate valve.
7. Insulated cleaning door for excellent heat retention.
8. Spacious user-friendly ash drawer for long emptying intervals.
9. Automatic ash removal in two closed ash boxes from 32 kW.
10. Patented multiple-pass heat exchanger for variable boiler operation. The P4 is also ideally suited to heat energy-efficient houses. The 3-pass design of the heat exchanger guarantees the best possible ash separation. The return feed lift function is also integrated.
11. Automatic sliding grate for ash removal, offering maintenance-free operation.
12. Tested burner gate valve.
13. Automatic ignition.
14. Special suction cyclone with integrated soundproofing for almost silent operation.

Perfection in the details

Smart Positioning and Installation

Feature: **Plug and Play**

Benefits:
- Unpack, plug it in, start heating
- Compact
- Easy positioning

The P4 Pellet has important advantages even before it is put into the boiler room. As it is so compact, it is child's play to place the P4 in even a confined boiler room. All components are already fully wired. If necessary individual components can be removed in a few steps. The parts can be put in position separately. This means that the P4 can also be aligned to renovated systems.

Feature: **Multi-layer heat exchanger in 3-pass design**

Benefits:
- Maximum boiler use
- Considerable cost savings
- Long lifespan

The patented multiple-pass heat exchanger means the P4 can adapt operation optimally in every respect. An external return feed lift is not necessary. Together with the variable operation, this means considerable operating savings. The special boiler construction prevents the temperature dropping below the dew point and ensure the P4 has a very long service life. The 3-pass design guides the path of the flue gases several times around the boiler, ensuring exceptionally efficient ash separation.

Feature: **Little cleaning required**

Benefits:
- Clean combustion
- Very low emissions
- Automatic ash removal

With the P4 Pellet you are choosing a quality product. The automatic sliding grate enables convenient and maintenance-free operation. Ash is always generated when wood or pellets are burnt. With the P4 Pellet it is transported automatically to two ash containers, which can be emptied simply and easily.

Feature: **Energy efficiency**

Benefits:
- Low energy consumption
- Low operating costs

Particular attention was paid to energy efficiency during the development of the P4 Pellet. This priority was clearly confirmed when the boiler was awarded the Blue Angel and the Austrian Ecolabel. The P4 Pellet consumes little energy during operation, keeping the operating costs down.

Perfection in the details

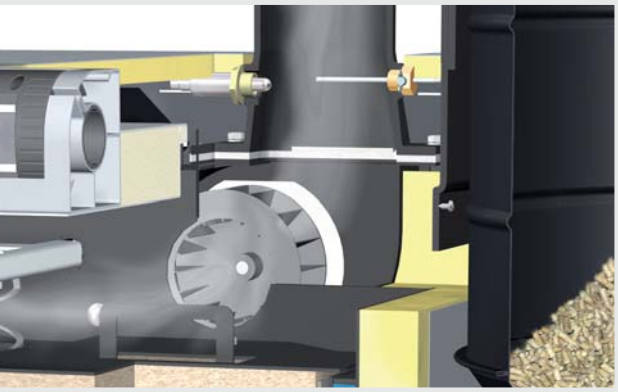

Feature: **Speed regulated induced draught fan and lambda control**

Benefits:
- Maximum ease of use
- Permanent optimisation of combustion

The serially controlled, speed regulated induced draught fan ensures the exact air quantity for combustion. Working together with the serially controlled lambda control, it ensures optimum combustion conditions.

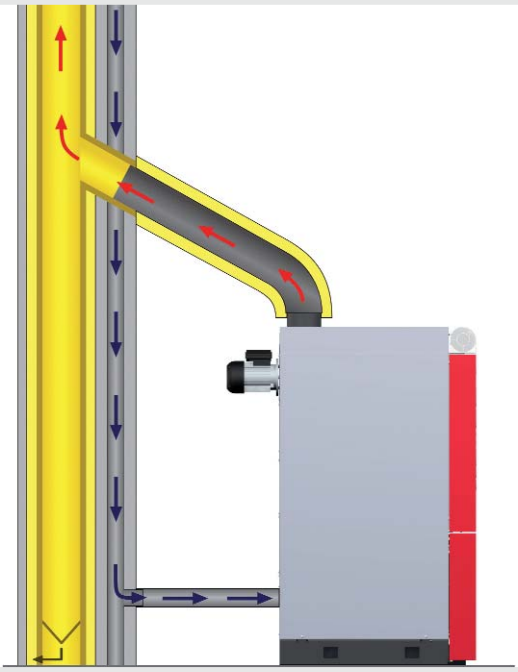

Feater: **Balanced flue operation**

Benefits:
- Perfectly suited to energy-saving houses
- The highest possible system efficiency

Energy-saving houses have a closed building shell. In traditional heating spaces there can be uncontrolled heat loss from the necessary ventilation openings. This is avoided with room air-independent heating boilers because of the direct air connection. The temperature of the combustion air that is fed in is also raised with an integrated pre-heating system, increasing the efficiency of the system.

Feature: **Extensive safety concepts**

Benefits:
- The highest possible operating safety
- Maximum reliability

The drop tube, together with the tried and tested safety sealed slider, provides a lock system for the highest operating safety. The self test before the system starts and the automatic diagnostics system guarantee safe operation.

New option: Condensing boiler technology

For output sizes from 8 to 25 kW, the Froling P4 Pellet boiler is also available, with innovative condensing boiler technology. The flue gas contains energy, which escapes unused up the chimney with conventional solutions, but an additional heat exchanger positioned on the back of the boiler makes use of it for the heating system. This makes it possible to achieve a **boiler efficiency rating of over 104 percent (HI)**. Froling won the innovation prize at the ExpoEnergy trade fair in Wels for condensing boiler technology in the area of biomass as early as 1996, making it a pioneer in the field.
The heat exchanger is made of high-quality stainless steel. It is cleaned using a water flushing system. The module can also be retrofitted.

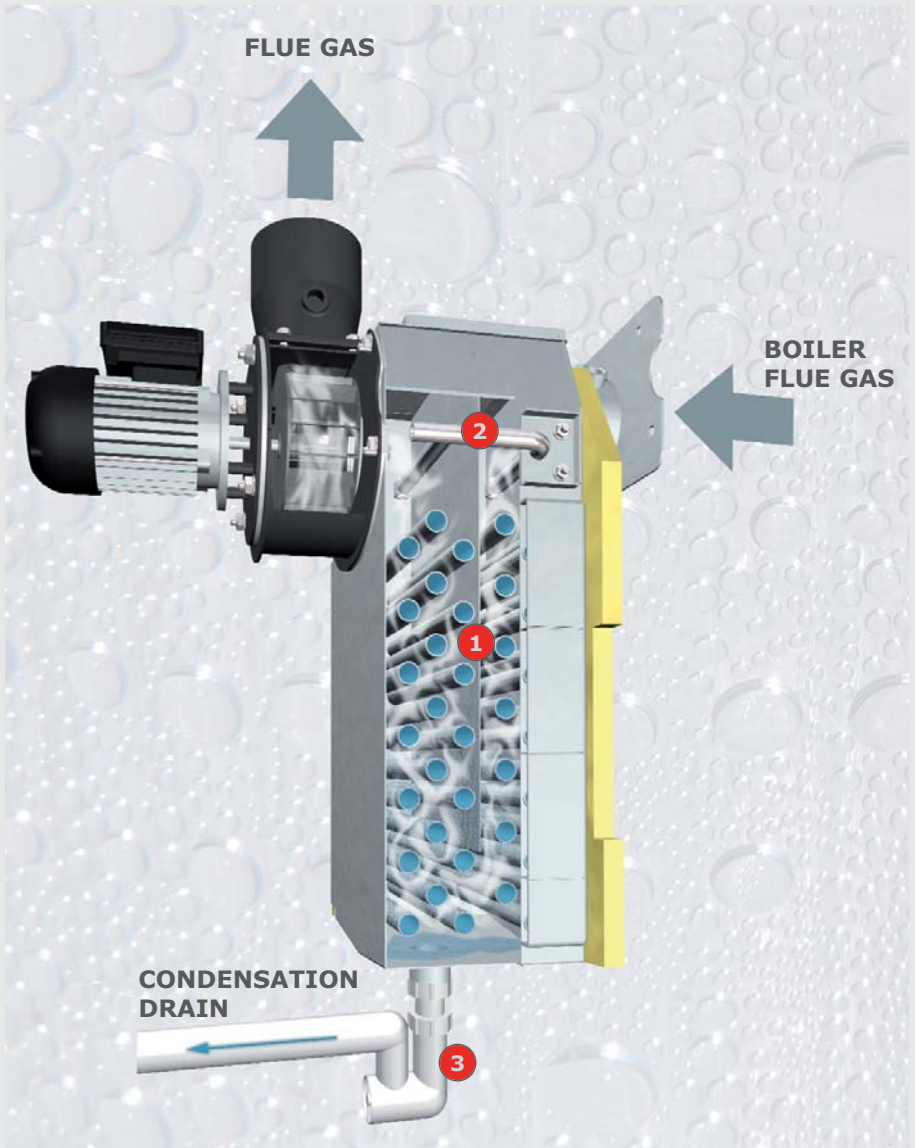

Overview of condensing boiler heat exchanger:

1. Stainless steel heat exchanger
2. Automatic flushing equipment
3. Drain with siphon to remove condensation

Requirements for optimal use of the condensing boiler technology:

- The lowest possible return temperature (e.g. floor or wall heating)
- Moisture and soot fire-resistant flue gas system
- Duct connection for drainage of condensation and flushing water

Feed Systems

Universal suction system

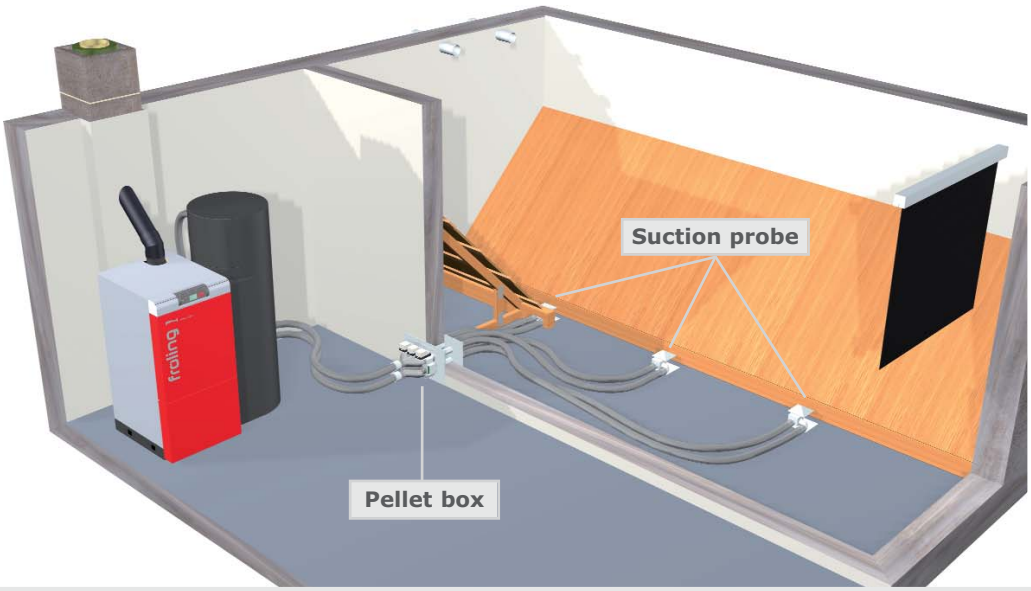

This system is easy to install and very flexible. The universal suction system is designed for those situation where the store is not next to the boiler room and the pellets have to be fed over a considerable distance. The position of the suction probes or the pellet box can be adjusted to fit the conditions of the store optimally.

Details and Modes

Pellet suction probe

The patented suction probes developed by Froling are distributed around the store area and ensure that emptying is reliable and even. Changeover between the probes is manual or fully automatic as required.

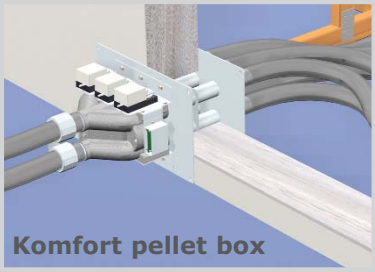

Komfort pellet box

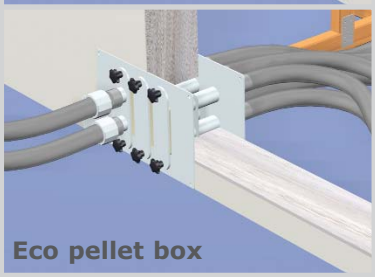

Eco pellet box

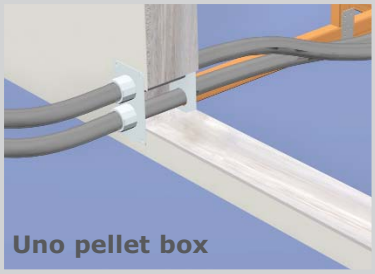

Uno pellet box

Pellet filler pipes

The pellets are delivered by tanker and blown into the store through a filler pipe. The second pipe is used for controlled and dust free removal of the escaping air.

Screw suction system

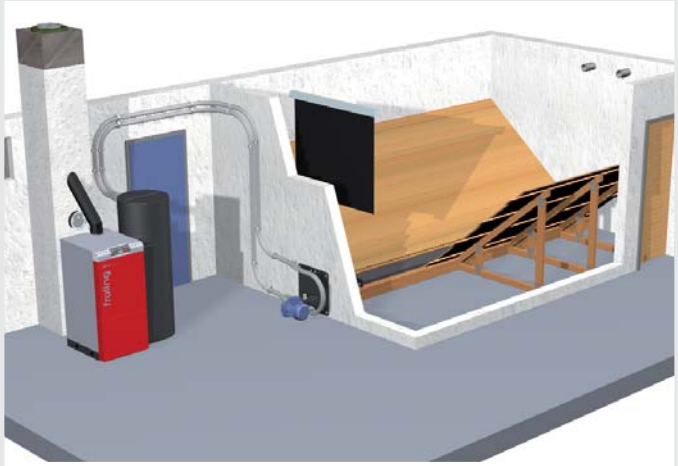

The Froling screw delivery system is the ideal solu-tion for rectangular rooms with front-end removal. The deep and horizontal position of the delivery screw means the space in the room is used optimally and complete emptying of the store is guaranteed. Com-bined with a suction system from Froling it also enables flexible boiler setup.

Bag silo system

The bag silo system is a flexible, simple way of storing pellets.

There are other advantages to using a bag silo. It is easy to assemble and store and dust-proof. You can fit rainproof and sun proof covers and install the silo outside

Underground feeder tank system

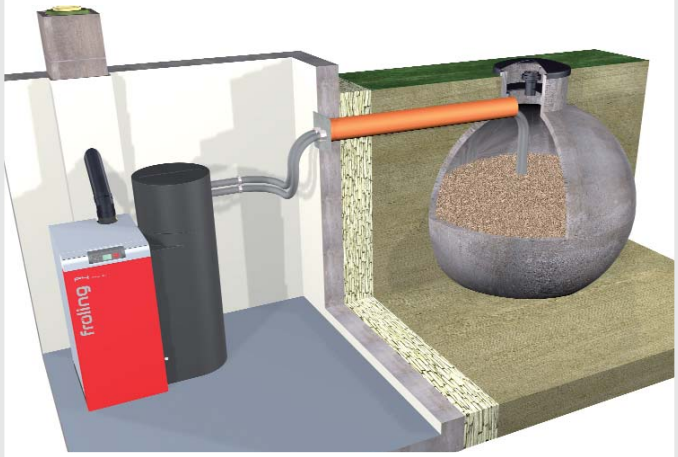

If you have no storage space indoors then the underground tank is a good alternative. The underground tank is buried outdoors and feeds pellets to the boiler via a suction pipe. The suction pipes should be laid inside a hollow pipe from the underground tank to the building.

Filling takes place through a shaft installed above the pellet tank.

Supply bin

If it is not possible to set up a store, a pellet supply bin is the perfect alternative.

The modular construction makes it possible to retrofit an automatic loading system.

Optional: Fuel tuning with the PST pellet deduster

Wood pellets are clean and very high quality. Any remaining wood dust can be filtered from the fuel simply and conveniently using the PST pellet deduster. This optimises the efficiency of the combustion zone for years.

The PST pellet deduster can be fitted in any position in the return air line of the pellet suction system.

The suction cyclone design means that the dust particles are separated from the return air and deposited internally in the container. The container is convenient to remove and transport to the emptying point. The system can be retrofitted at any time and it is maintenance-free.

Feature: **Lambdatronic P 3200 control system**

Benefits:

- Exact combustion control through its serially controlled lambda control
- Large, clear control unit with adjustable viewing angle
- Menu-based operation with online help
- Boiler navigation from the living room

With the new P3200 boiler control, Froling is stepping into the future. The control unit, optimised to suit all requirements, and the individually adjustable viewing angle guarantees that all operating statuses are clearly shown. The optimally organised menu structure makes it easy to operate. The important heating and hot water functions can be selected simply by using the function keys.

The innovative **Froling bus system** makes it possible to install extension modules in any location. For example, at the boiler, at the heat distributor, at the tank, in the living room or in the next house: the local controls can be installed wherever they are needed. The minimum of electrical cables is another plus.

You can have even more comfort with the new **RBG 3200 room console**. The heating system can easily be controlled from your living room. It is extremely easy to read off all the important values and status messages and to change settings at the push of a button

Systematic comfort

Feature: **Froling SMS box**

Benefits:
- Alarm message via SMS
- Active control of the boiler

The Froling system for all automatically fed systems provides the option of monitoring and controlling the boiler via SMS. The SMS box can be programmed directly from a mobile phone and has two error message inputs and two re-mote switch outputs. The alarm and message texts can be configured as required. They can range from switching heating on and off to changing mode, e.g. from setback mode to party mode (only in connection with room sensor). An automatic response confirms the execution of the command that was sent.

Feature: **Froling Visualisation 3200**

Benefits:
- Monitoring and operation from a PC
- Recording the boiler data
- Remote monitoring via modem

The optional boiler display software enables easy boiler control from a computer. All operating values and customer parameters can be displayed and changed. The standard Windows interface and the clear menu structure guarantee ease of use. It is possible to connect to the visualisation over the telephone network using a modem. This means that the heating system can be monitored from any location.

Feature: **Systems engineering for optimum energy consumption**

Benefits:
- Complete solution for all requirements
- The components work together perfectly
- Links in to solar energy

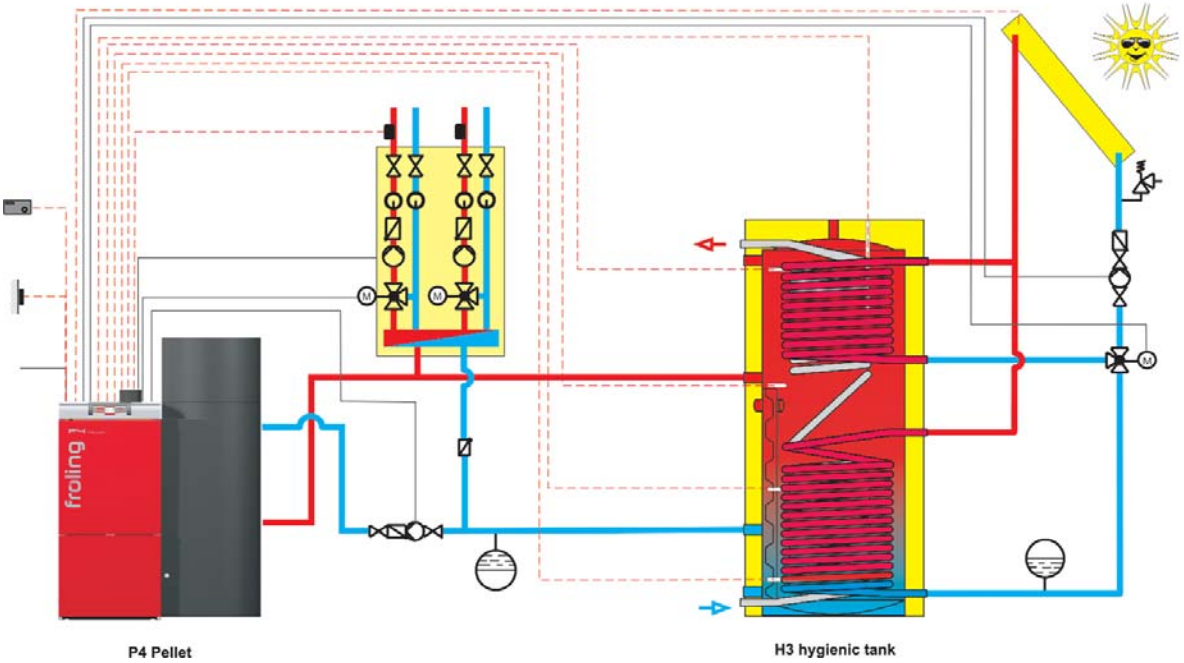

P4 Pellet with H3 hygienic tank and link to solar panel system

Froling systems engineering enables efficient energy management. Up to 4 storage tanks, up to 8 hot water tanks and up to 18 heating circuits can influence the heat management. You also benefit from the option of connecting other types of energy generation, such as solar panel systems.

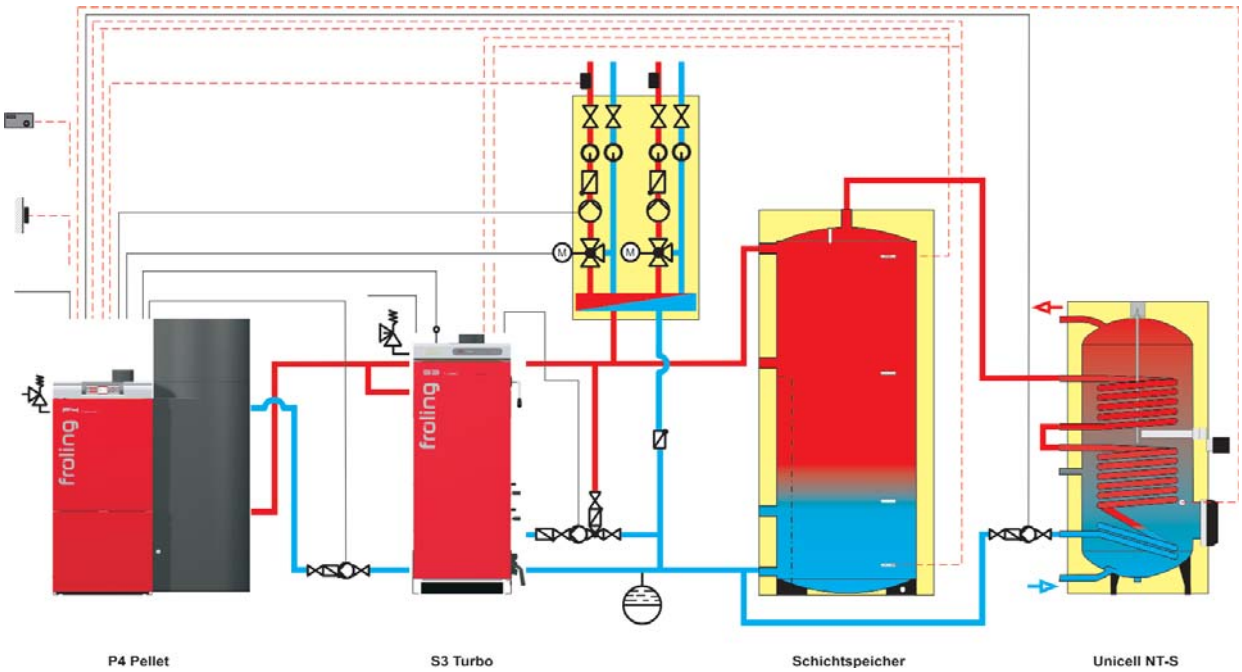

P4 Pellet with S3 Turbo, layered tank and Unicell NT-S

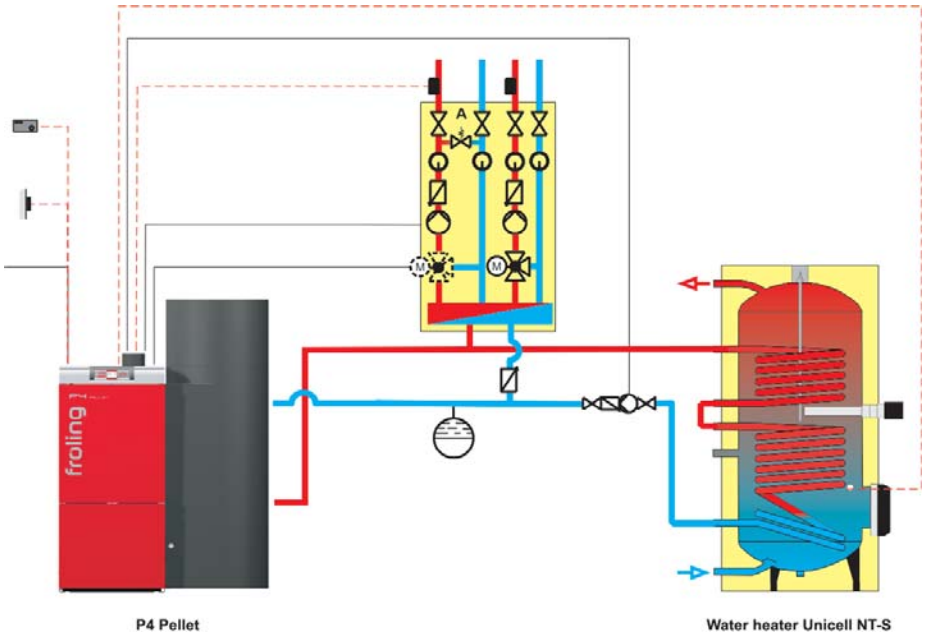

P4 Pellet with water heater Unicell NT-S

Variable operation

With variable operation the Froling P4 is only heated to the temperature level required by the heating system (hot water tank, radiator heating circuit). This avoids unnecessary loss of radiant heat. This special feature guarantees maximum efficiency and saves the need for an external return feed lift.

Perfect connections

NEW! Froling cascade controller

For larger buildings, such as hotels or public buildings, the heat requirement fluctuates considerably. Froling offers the necessary flexibility with a cascade. With this intelligent solution, you can combine up to four P4 Pellet boilers together, reliably providing a total output of up to 240kW. You can also see the advantages of a cascade during the warm months. If the heat requirement is low, one boiler is often sufficient for hot water preparation. This means the heating solution is particularly efficient and economical. A further advantage is the increased reliability of operation, as the heat is provided by several boilers.

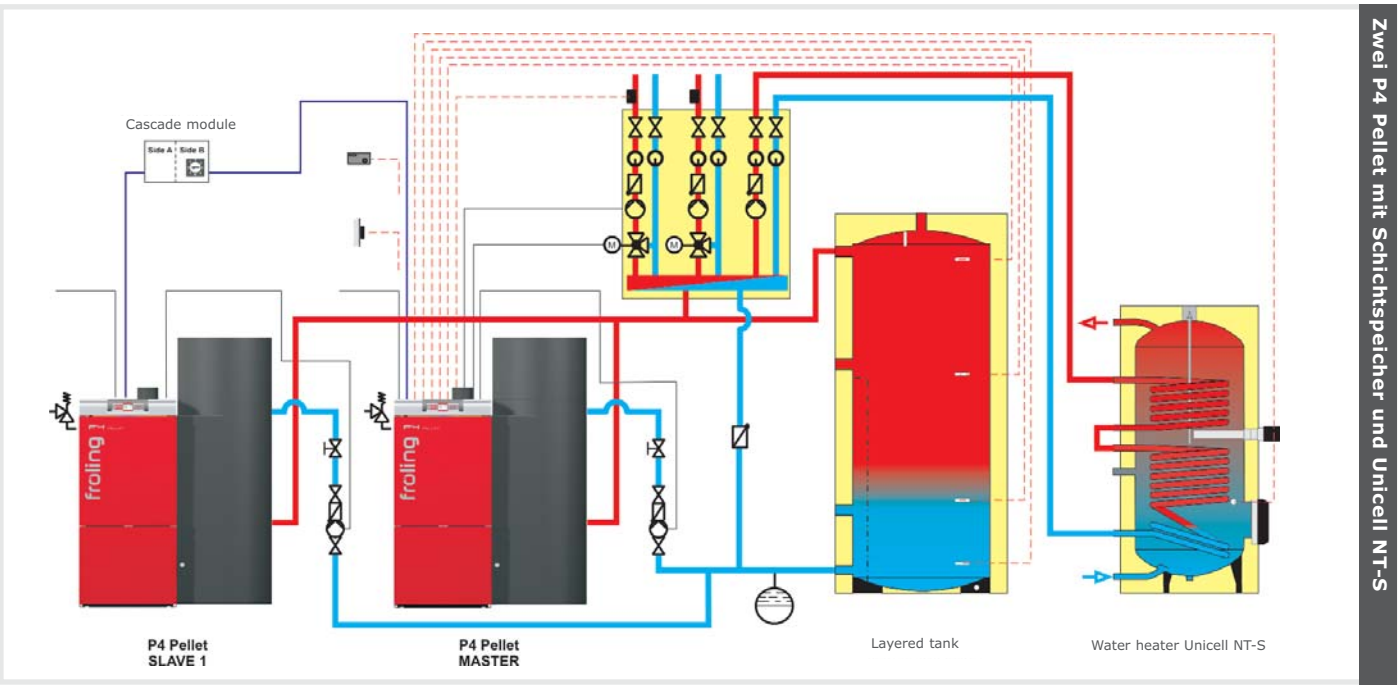

Zwei P4 Pellet mit Schichtspeicher und Unicell NT-S

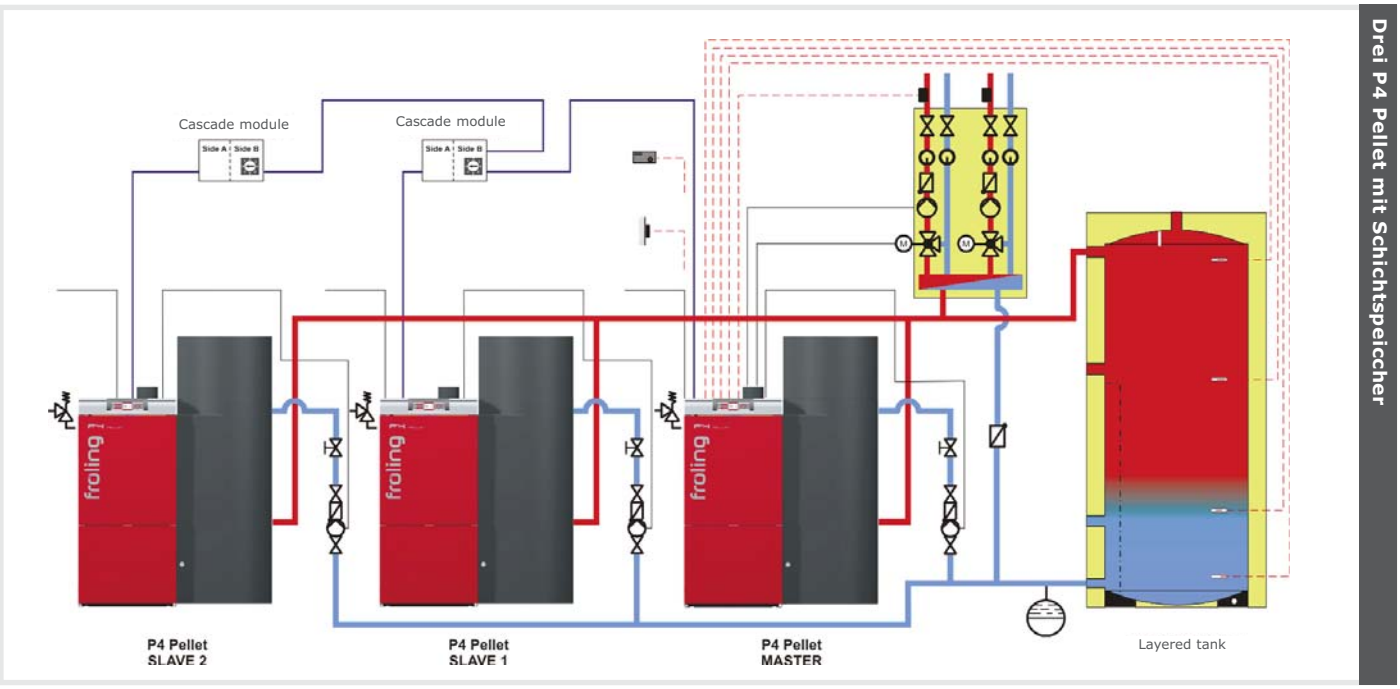

Drei P4 Pellet mit Schichtspeicher

Technical specifications - P4 Pellet supply bin

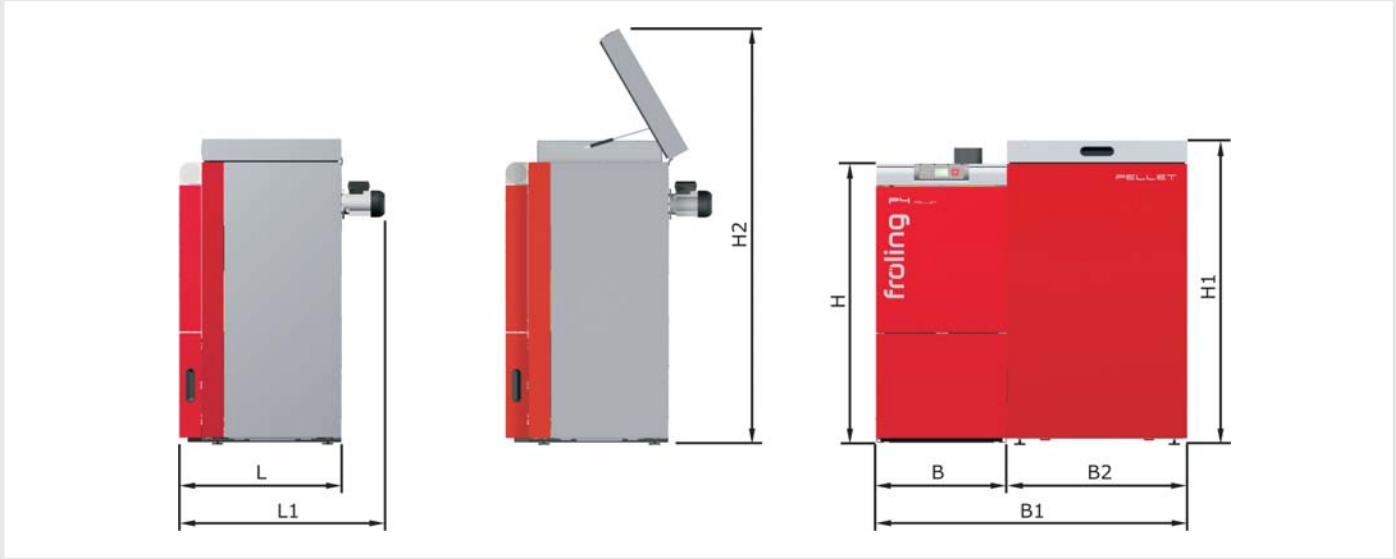

Dimensions			P4 Pellet 8	P4 Pellet 15	P4 Pellet 20	P4 Pellet 25
L	Length of boiler	[mm]	740	740	740	740
L1	Length incl. induced draught fan	[mm]	940	940	940	940
B	Width of boiler	[mm]	600	600	770	770
B1	Width inc. supply bin	[mm]	1425	1425	1425	1425
B2	Width of supply bin	[mm]	825	825	825	825
H	Height of boiler	[mm]	1280	1280	1280	1280
H1	Height of supply bin	[mm]	1400	1400	1400	1400
H2	Height of supply bin when open	[mm]	1890	1890	1890	1890

Technical specifications - Supply bin		P4 Pellet 8	P4 Pellet 15	P4 Pellet 20	P4 Pellet 25
Capacity	[l]	235	235	235	235
Total weight inc. boiler	[kg]	396	406	470	480

Technical specifications

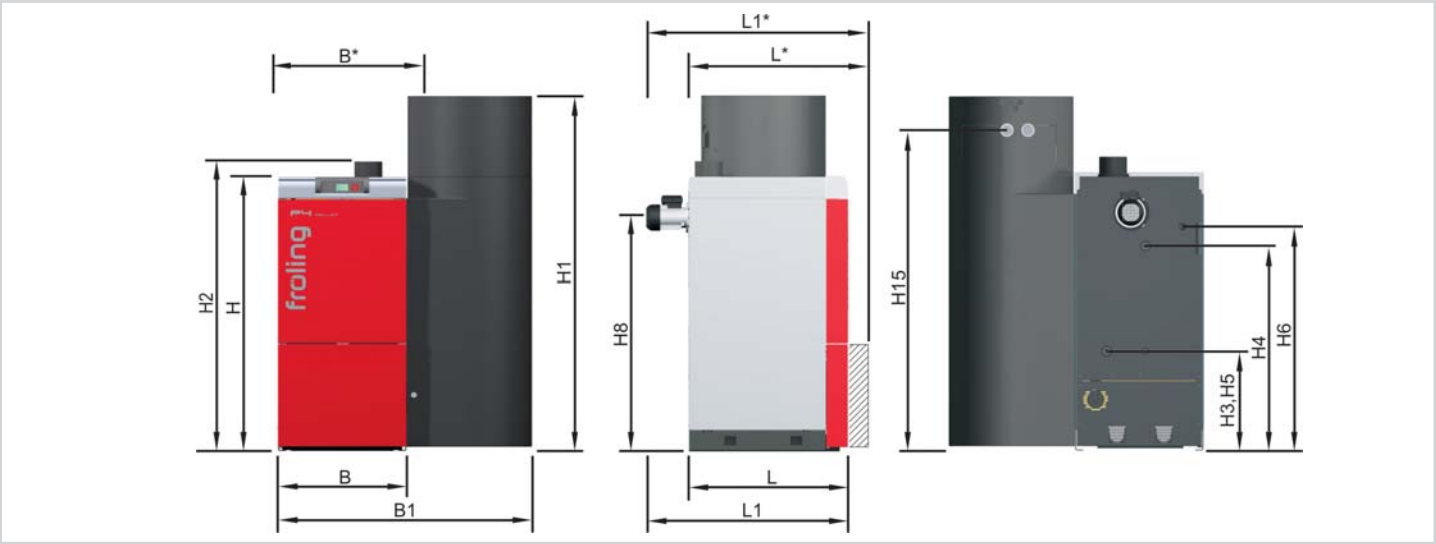

Dimensions - P4 Pellet [mm]		P4 8	P4 15	P4 20	P4 25	P4 32	P4 38	P4 48	P4 60	P4 80	P4 100
L	Length, boiler[1]	740	740	740	740						
L*	Length, boiler[1]					820	820	900	900	1000	1000
L1	Total length inc. induced draught fan	940	940	940	940						
L1*	Total length inc. induced draught fan					1020	1020	1100	1100	1070	1070
B	Width, boiler	600	600	770	770	860	860	1030	1030	1235	1235
B*	Width, boiler inc. support[2]	705	705	875	875	965	965	1275	1275	1480	1480
B1	Total width, inc. suction cyclone	1185	1185	1355	1355	1445	1445	1790	1790	2085	2085
H	Height, boiler[3]	1280	1280	1280	1280	1430	1430	1585	1585	1710	1710
H1	Total height, inc. suction cyclone	1660	1660	1660	1660	1900	1900	1900	1900	1900	1900
H2	Height, flue gas pipe connection	1350	1350	1350	1350	1530	1530	1685	1685	1785	1785
H3	Height, outfeed connection	460	460	460	460	460	460	515	515	520	520
H4	Height, return feed connection	940	940	955	955	1085	1085	1240	1240	1360	1360
H5	Height, drainage connection	460	460	460	460	460	460	515	515	520	520
H6	Height, ventilation connection	1030	1030	1030	1030	1155	1155	1310	1310	1430	1430
H8	Height, induced draught fan connection	1090	1090	1090	1090	1215	1215	1375	1375	1495	1495
H15	Height, suction system connection	1480	1480	1480	1480	1720	1720	1720	1720	1720	1720
	Flue pipe diameter	130	130	130	130	150	150	150	150	200	200

1) Corresponds to the minimum positioning length
2) Width of the boiler inc. support for positioning unit. Corresponds to the minimum positioning length after removing the stoker fitment, suction cyclone and positioning unit.
3) Corresponds to the minimum positioning height after removing the stoker fitment, suction cyclone and positioning unit.

Technical specifications - P4 Pellet		P4 8	P4 15	P4 20	P4 25	P4 32	P4 38	P4 48	P4 60	P4 80	P4 100
Rated heat output	[kW]	10,5	14,9	20	25	32	38	48	58,5	80	99
Heat output range	[kW]	3,1-10,5	3,1-14,9	6,0-20,0	7,5-25,0	8,9-32,0	8,9-38,0	14,4-48,0	17,3-58,5	24,0-80,0	24,0-99,0
Power output	[W]	96	123	110	110	110	110	120	120	115	112
Water capacity	[l]	70	70	80	80	125	125	170	170	280	280
Weight of the boiler	[kg]	345	355	425	435	525	535	755	765	1090	1100

You can find more technical information and tips about Heating with Pellets from our detailed planning documentation.

P0190510 - All illustrations intended as a guide only.
We reserve the right to make technical changes without prior notice.
Errors and omissions excepted.
Sources for external image material: www.aboutpixel.de, www.pixelio.de

froling

Heizkessel- und Behälterbau GesmbH
A-4710 Grieskirchen, Industriestr. 12
Austria: Tel +43 (0) 7248 606 • Fax +43 (0) 7248 606-600
Germany: Tel +49 (0) 89 927 926-0 • Fax +49 (0) 89 927 926-219
E-mail: info@froeling.com • Internet: www.froeling.com